British Hedgehog Preservation Society

Hedgehog Homes

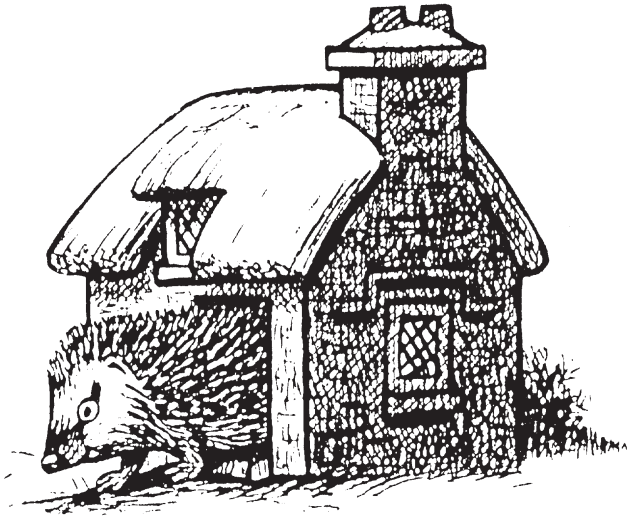

Part of the

Know your Hedgehog series

PUBLISHED BY THE BRITISH HEDGEHOG PRESERVATION SOCIETY,
HEDGEHOG HOUSE, DHUSTONE, LUDLOW, SHROPSHIRE SY8 3PL
www.britishhedgehogs.org.uk

IN THE WILD
Efficient winter nests are essential if hedgehogs are to survive hibernation. Thus, in autumn they begin to collect leaves, grass, straw, bracken, reeds etc. and use these materials for building their own nests under hedgerows, fallen logs or piles of brushwood. These "HIBERNACULA" prove to be surprisingly waterproof and good insulation against the cold.

IN THE NATURAL GARDEN
Most gardens have a supply of the materials mentioned above and suitable sites for nests - under sheds, compost heaps, shrubs and piles of leaves or behind stacks of logs and under spare building materials. In these circumstances, if hedgehogs want to spend a winter here, they should be able to get on and build their own shelters. However, you may wish to provide your 'resident' hedgehog with (or encourage any in the vicinity to become 'resident' in your garden by the provision of) a more permanent structure.

IN MORE FORMAL GARDENS
Where there is not so much opportunity for a natural nest, you can help by providing a ready-made home for them.

FEEDING
Hedgehogs will not usually eat and sleep in the same place so it's best not to offer food inside the home (except perhaps to tempt them in initially). Once there is a resident, move food away from the box so as not to attract predators or rival hedgehogs to the site. You can create a simple feeding station to offer food and water in by getting a plastic or wooden storage box, cutting a 13cm square gap in the one side and placing food underneath it as far away from the entrance as possible. A large stone or brick on top will help weigh it down and another around 13cm in front of entrance will make it more tricky for cats to steal the hedgehogs' food!

HEDGEHOG HOUSE - MARK I *(Council Tax Band "H")*
This is a design that the Society recommends and is a permanent type of home. Any available timber can be used (old or new) but the better it is made, the longer it will last. The wood can be treated with water based preservative only on the outside. On no account should the hedgehog house be creosoted or treated with non-water based preservatives or paint as the fumes remain for a long time and can be very harmful. Do not nail down the roof as you may need to clean the box in the future. The entrance tunnel could be constructed with old bricks placed on top of each other with a piece of slate with a brick on top for the roof. Make sure the entrance is kept clear and avoid the temptation to disturb the hedgehogs. The finished home could be covered with plastic sheeting, soil and twigs placed on top, or left as it is. Straw and any leaves left outside may be taken in and used for bedding by any prospective resident.

See illustration opposite.

The wood we have used is 2cm thick, if the wood you use is a different thickness, you will need to adjust the measurements to suit.

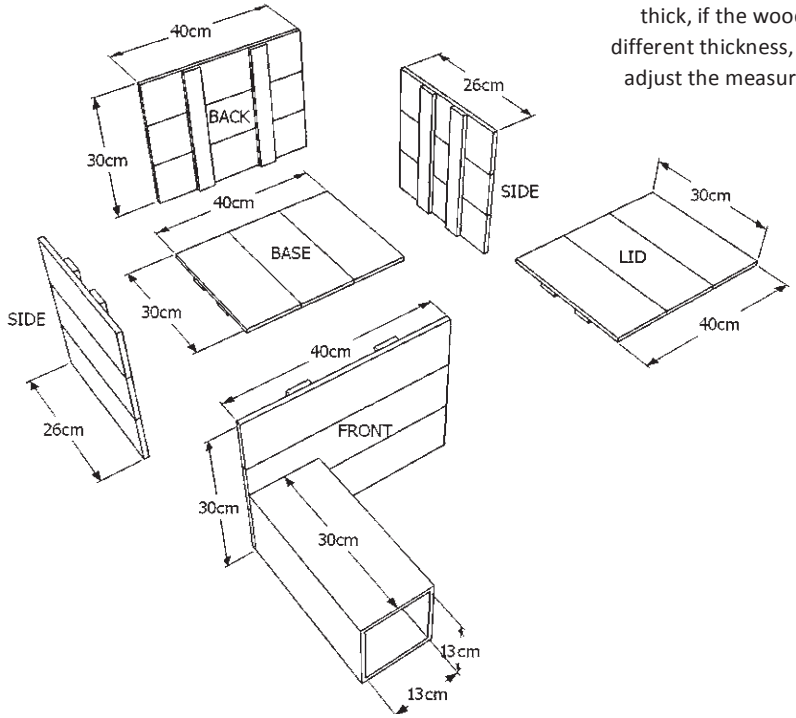

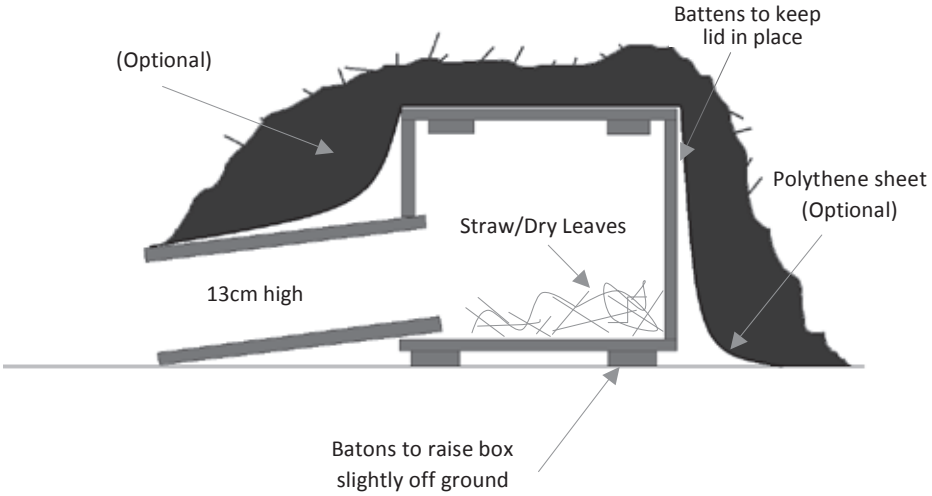

N.B. Do not creosote or treat wood with non-water based preservatives or paint (even water based preservatives should only be used on outside of box)

HEDGEHOG HOUSE - MARK II *(Council Tax Band "D")*

A wooden or plastic storage box buried into a mound will probably attract hedgehogs. A hedgehog "Prefab"! Make the box entrance approximately 13cm square in one end of the box and avoid leaving "rough" edges. Set the box into your log pile or similar. Inside you can make it more inviting to hedgehogs by half filling with dry leaves or straw.

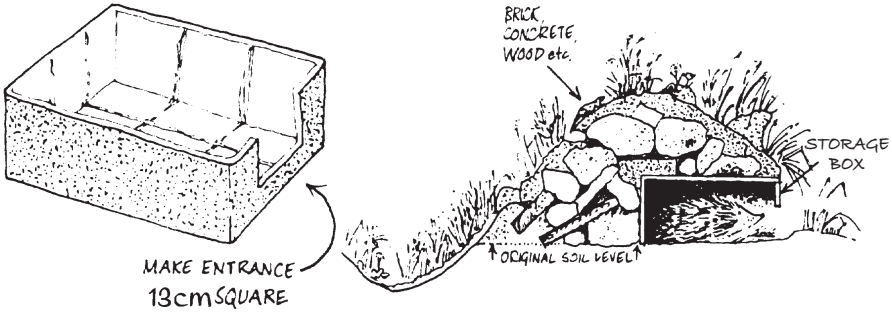

HELPFUL HINTS

When you have made a hedgehog house, place it in a quiet part of your garden, preferably against a bank, wall or fence and hope that you will have a visit from a friend seeking a home. Make sure the entrance to the house does not face North or North East, thus avoiding the cold winter winds. It may then become the winter home for some lucky hedgehog. If female, she may even have her young in it in the spring. After winter use, late March/early April, some people like to clean the houses out (though they will also get reused if left alone). If you decide you want to clean the box out, do make sure there is not a hedgehog in residence before you disturb it. To make sure there is nobody in residence, put a small light obstruction in the entrance to see whether it is pushed away overnight; if it isn't this is an indication that the hedgehog may no longer be in residence (but take care just in case). You can clean the house using hot water and scrubbing brush and an organic Pyrethrum powder, suitable for caged birds. DO NOT CLEAN IF A HEDGEHOG IS IN RESIDENCE. You might prefer to leave some clean bedding materials in a bundle by the 'front door' for the hedgehog to freshen up the home for themselves!

On no account should the hedgehog house be creosoted or treated with non-water based preservatives or paint as the fumes remain for a long time and can be very harmful. If used, water based preservatives should be on the outside of the box only.

There are various "ready-made" hedgehog homes on the market, including the one that can be obtained from our Hogalogue.

WHY NOT JOIN THE BRITISH HEDGEHOG PRESERVATION SOCIETY?

For further information please send a s.a.e. to:-
The British Hedgehog Preservation Society,
Hedgehog House, Dhustone, Ludlow, Shropshire SY8 3PL
Tel: 01584 890801 E-mail: info@britishhedgehogs.org.uk
www.britishhedgehogs.org.uk

Price 25p

L5.03/21©

barringtonprint, Leominster

REG CHARITY NO.
1164542
(formerly 326885)